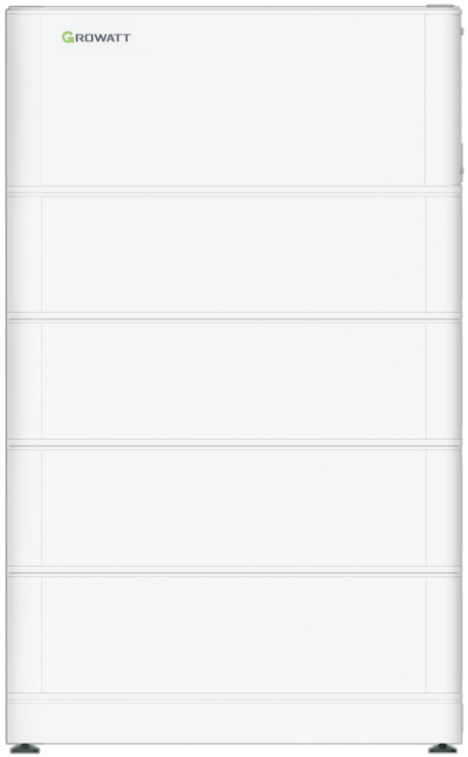

ARK 5.1-25.6XH-A1 High Voltage Battery System

User Manual (V1.0)

Download Manual

Growatt New Energy

Shenzhen Growatt New Energy Co., Ltd
4-13/F,Building A,Sino-German(Europe) Industrial Park,
Hangcheng Ave, Bao'an District, Shenzhen, China

T +86 755 2747 1942
E service@ginverter.com
W www.ginverter.com

GR-UM-242-A-01

About this Document

This document describes the installation, electrical connection, operation, commission, maintenance and troubleshooting of ARK 5.1-25.6XH-A1 Battery System (hereafter simply put ARK XH-A1). Before installing and operating ARK XH-A1 system, ensure that you are familiar with product features, functions, and safety precautions provided in this document.

Symbol	Description
WARNING	Indicates a potentially hazardous situation, if not avoided, could result in serious injury or death.

Contents

1 Product Overview
- 1.1 Intended Use
- 1.2 Appearance
- 1.3 Working Principle and Function

2 Safety
- 2.1 Basic security
- 2.2 Safety Precautions
- 2.3 Warning Labels
- 2.4 Emergency Responses

3 Storage and Transportation
- 3.1 Storage Requirements
- 3.2 Transportation Requirement

4 Installation
- 4.1 Basic Installation Requirements
- 4.2 Installation Required Tools
- 4.3 Installation Procedures
- 4.4 Electrical Connection

5 Power on/off Battery system
- 5.1 Power on Battery system
- 5.2 Power off battery system

6 Maintenance Guide
- 6.1 Preparation
- 6.2 Battery pack or high voltage controller replacement
- 6.3 System Failure Information List and Troubleshooting Suggestions

7 Technical Specifications
- 7.1 ARK XH-A1(high voltage system)
- 7.2 BDC 95045-A1 (High voltage controller)
- 7.3 ARK 2.5H-A1 (battery pack)

Appendix I

1 Product Overview

1.1 Intended Use

The entire ARK XH-A1 high-voltage energy storage system includes a BDC 95045-A1 (High voltage controller) and multiple ARK 2.5H-A1(battery packs, Number of series less than 10).

Each ARK 2.5H-A1 consists of 50Ah cells which form 51.2V voltage battery pack via one parallel and sixteen serial connections (1P16S). Two to ten ARK 2.5H-A1 can be connected in serial and extend the capacity and power of energy storage system.

The ARK XH-A1 battery system powers the loads through hybrid inverter (It can be equipped with single-phase or three-phase, the following is just an example)at nighttime without solar; when solar becomes available during daytime, solar energy powers the loads as a priority and store residual solar power into the ARK XH-A1 battery system.

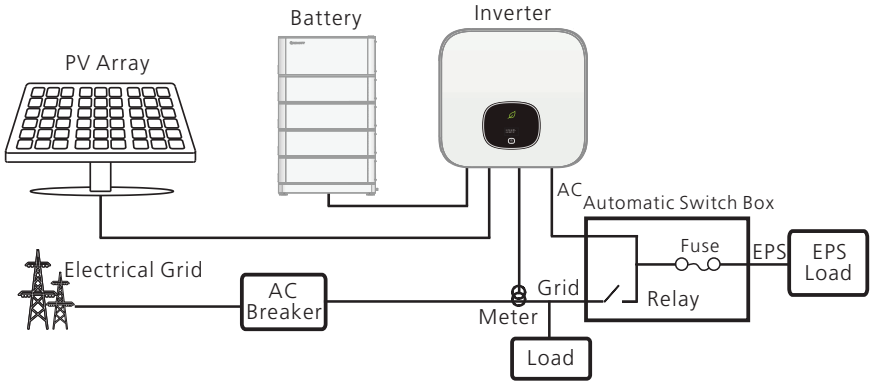

Fig 1.1: System diagram of ARK XH-A1High voltage battery system

1.2 Appearance

1.2.1 BDC 95045-A1 (High voltage controller)

BDC 95045-A1 (High voltage controller) is composed of battery control unit (BCU), Power control units, relay, DC breaker, power supply and communication terminals. The appearance of the product is shown as below.

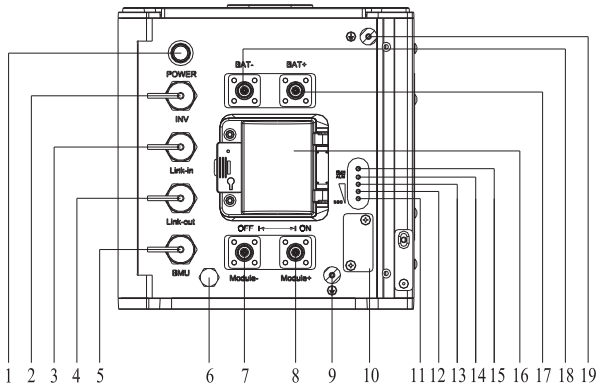

Fig 1.2: Schematic diagram of power panel

Location	Port		Function
1	POWER		Wake up battery.
2	INV		Port for communication with hybrid inverter.
3	Link-in		Battery system in parallel communication input interface.
4	Link-out		Battery system in parallel communication output interface.
5	BMU		Communication with the battery module.
6	Pressure relief valve		Pressures inside is released via the vent.
7	Module-		Connect to the negative power terminal of the battery module.
8	Module+		Connect to the positive power terminal of the battery module.
9	⏚		Ground terminal, connect to the battery module.
10	USB interface		USB interface.
11	LED1		Blue, 0%-25%SOC.
12	LED2		Blue, 26%-50%SOC.
13	LED3		Blue, 51%-75%SOC.
14	LED4		Blue, 76%-100%SOC.
15	LED5	RUN	Yellow Run light indicates normal operation.
		ALM	Red ALM light indicates failure or protection status.
16	Breaker		Breaker to turn on/off the whole battery system
17	BAT+		The positive output from battery system to the hybrid inverter.
18	BAT-		The negative output from battery system to the hybrid inverter.
19	⏚		Ground terminal, connect to the hybrid inverter.

Dimension (unit: mm)

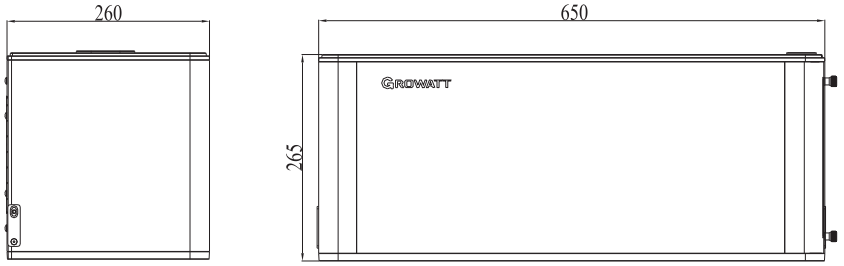

Fig 1.3: Dimension of BDC 95045-A1

1.2.2 ARK 2.5H-A1 (battery pack)

ARK 2.5H-A1 consists of battery module (including cell and mechanical parts), Battery management unit (BMU) as well as power and communication terminals. Product appearance is shown as below.

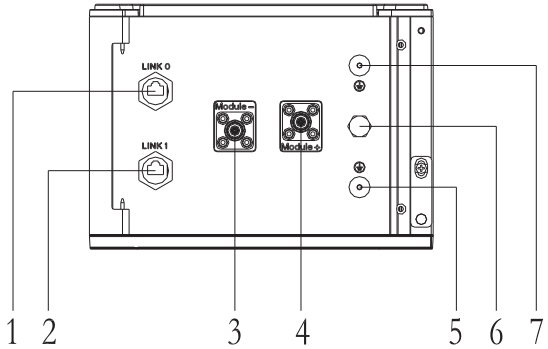

Fig 1.4: Schematic diagram of power panel

Location	Port	Function
1	Link0	Communicate with the previous module.
2	Link1	Communicate with the next module.
3	Module-	Power terminal connected to the negative terminal of the module.
4	Module+	Power terminal connected to the positive terminal of the module.
5	⏚	Ground terminal, connect to the next module.
6	Pressure relief value	Pressures inside is released via the vent.
7	⏚	Ground terminal, connect to the pervious module.

Dimension (unit: mm)

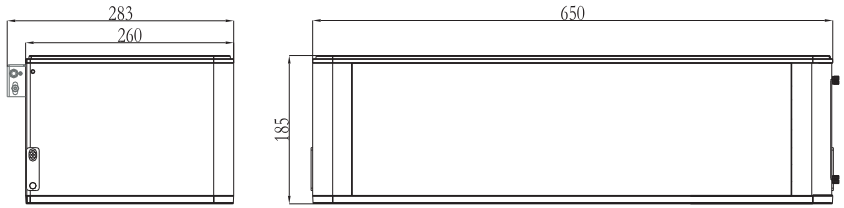

Fig 1.5: Dimension of ARK 2.5H-A1
(The depth dimension is 283mm when wall-mount installation is selected)

1.3 Working Principle and Function

The ARK XH-A1 high voltage battery system is composed of a High voltage controller BDC 95045-A1 and battery packs ARK 2.5H-A1 in series. It contains electrochemical batteries, battery control units, Power control units, battery management units, power and signal terminals, and mechanical parts.
Compared with other battery systems, it has better charging and discharging performance, higher charging and discharging efficiency, more accurate status monitor, longer cycle life and less self-discharge loss.
A single cluster system can connect 2 to 10 PACKs in series to increase the capacity and power of the battery system; at the same time, it supports parallel connection of 2 to 4 clusters of battery systems. The entire battery system communicates with hybrid inverter through RS485 communication, and the operation stability is high.

- Monitoring: voltage, current and temperature detection of both single cells and battery system.
- Protection and Alarm: protection and alarm when overvoltage, under voltage, over current, over-temperature or under temperature occurs. See Appendix I for the details.
- Report: report all alarm and status data to hybrid inverter.
- Series connection: support two to ten battery packs in Series connection.
- Parallel connection: support two to four battery clusters in parallel.
- Balance function: passive balance function.
- Power failure triggered by fault: 15 minutes after the battery system and hybrid inverter communication is disconnected or after under-voltage protection.

2 Safety

When installing or using a battery system, the safety information contained in this section must always be followed. For safety reasons, it is the installer's responsibility to be familiar with this manual and all warnings before installation.

2.1 Basic security

The battery system has been designed and tested in accordance with strict rules with international safety certification requirements. Before any installation or use of the battery system, please read all safety instructions carefully and always follow the relevant rules. Growatt is not responsible for any consequences resulting from violation of the following regulations:

- Damage occurred during transportation.
- Incorrect transportation, storage, installation and use, or customer fails to convey the correct information about transportation, storage, installation and use to terminal customers.
- Non-professional installation.
- Failure to obey the rules of this operation instructions and safety precautions in this document.
- Unauthorized modifications or removal of the software package.
- The product's tamper label is damaged or the product lacks any parts (except authorized disassembly parts).
- Operation in extreme environments which are not allowed in this document.
- Repair, disassemble, or change PACKs without authorization and cause failure.
- Damage to shell labels or modifies date of production.
- Battery packs fail to be charge for more than six months.
- Damages due to force majeure (such as lightning, earthquakes, fire, and storms).
- Warranty expiration.

2.2 Safety Precautions

2.2.1 Environmental requirements

➢ Do not expose the battery to temperature above 50℃ or heat sources.
➢ Do not install or use the battery in wet locations, moisture, corrosive gases or liquids, such as bathroom.
➢ Do not expose the battery to direct sunlight for extended periods of time.
➢ Place battery in safe place away from children and animals.
➢ Battery power terminals shall not touch conductive objects such as wires.
➢ Do not dispose the batteries in fire, which may cause an explosion.
➢ The battery system shall not come in contact with liquids.

2.2.2 Operation Precautions

➢ Do not touch the battery system with wet hands.
➢ Do not disassemble the battery system without permission.
➢ Do not crush, drop or pierce the battery pack and high voltage controller.
➢ Dispose the batteries according to local safety regulations.
➢ Store and recharge battery in accordance with this manual.
➢ Ensure the connection of ground wire reliable.
➢ Remove all metal objects such as watches and rings that could cause a short-circuit before installation, replacement and maintenance.
➢ The system should be installed, repaired, replaced or maintained by skilled person or instructed person

✦ Skilled person
Person with relevant education and experience to enable him or her to perceive risks and to avoid hazards which the equipment can create .
Note 1 to entry: Such person has access to restricted access areas
[SOURCE: IEC 60050-195:1998, 195-04-01, Modified – The word “(electrically)” has been deleted from the term, and “electricity” has been replaced by “the equipment” in the definition. The note has been added.]

✦ Instructed person
Person adequately advised or supervised by skilled persons to enable him or her to perceive risks and to avoid hazards which the equipment can create
Note 1 to entry: Such person has access to restricted access areas
Note 2 to entry: Examples of activities performed by an instructed person can be found in IEC 61140:2001, Clause 8.
[SOURCE: IEC 60050-195:1998, 195-04-02, Modified – The word “(electrically)” has been deleted from the term, and the notes have been added.]

➢ When storing or handling batteries, do not stack batteries without package.
➢ Do not broke the battery, the released electrolyte may be toxic and is harmful to skin and eyes.
➢ Packaged batteries should not be stacked more than specified number stipulated on the packing case.
➢ Do not use damaged, failed or deformed batteries, which may lead to high temperature or even dangerous accidents. Continued operation of damaged battery may result in electrical shock, fire or even worse.

2.3 Warning Labels

Symbols	Description
	Operation after 5 minutes after disconnecting the power supply (including disconnect/connect power wiring)
	Do not dispose in trash
	Lithium ion battery can be recycled
	Certification in European union area
	Electric shock hazard

Symbols	Description
	Explosive gas
	May leak corrosive electrolyte
	Heavy enough to cause severe injury
	Keep the Pack away from children
	Make sure the battery polarity well connected
	Do not expose to fire
	Operate as the Manual

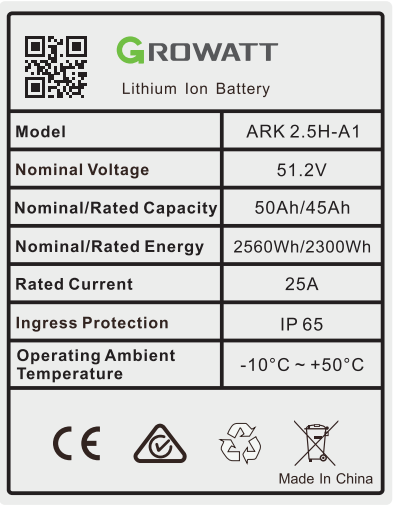

GROWATT

Lithium Ion Battery

Model	ARK 2.5H-A1
Nominal Voltage	51.2V
Nominal/Rated Capacity	50Ah/45Ah
Nominal/Rated Energy	2560Wh/2300Wh
Rated Current	25A
Ingress Protection	IP 65
Operating Ambient Temperature	-10°C ~ +50°C

Made In China

Fig 2.1: Nameplate

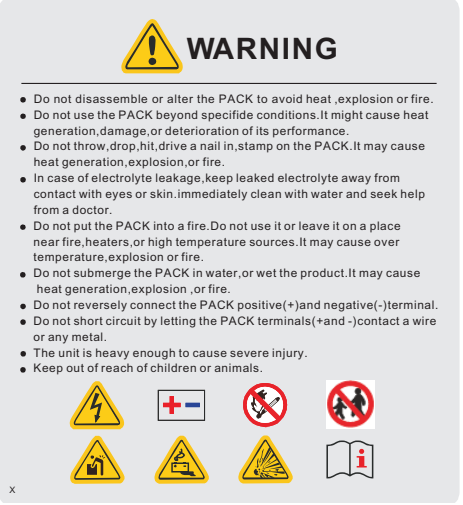

WARNING

- Do not disassemble or alter the PACK to avoid heat ,explosion or fire.
- Do not use the PACK beyond specifide conditions.It might cause heat generation,damage,or deterioration of its performance.
- Do not throw,drop,hit,drive a nail in,stamp on the PACK.It may cause heat generation,explosion,or fire.
- In case of electrolyte leakage,keep leaked electrolyte away from contact with eyes or skin.immediately clean with water and seek help from a doctor.
- Do not put the PACK into a fire.Do not use it or leave it on a place near fire,heaters,or high temperature sources.It may cause over temperature,explosion or fire.
- Do not submerge the PACK in water,or wet the product.It may cause heat generation,explosion ,or fire.
- Do not reversely connect the PACK positive(+)and negative(-)terminal.
- Do not short circuit by letting the PACK terminals(+and -)contact a wire or any metal.
- The unit is heavy enough to cause severe injury.
- Keep out of reach of children or animals.

Fig 2.2: Label

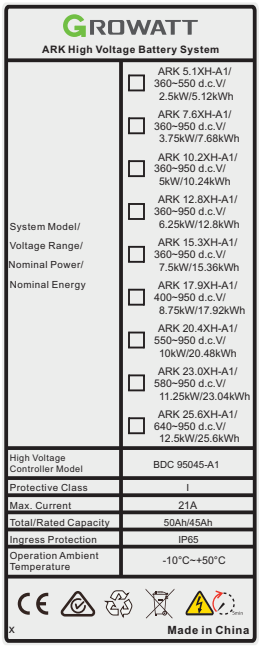

GROWATT

ARK High Voltage Battery System

System Model/ Voltage Range/ Nominal Power/ Nominal Energy	ARK 5.1XH-A1/ 360~550 d.c.V/ 2.5kW/5.12kWh
	ARK 7.6XH-A1/ 360~950 d.c.V/ 3.75kW/7.68kWh
	ARK 10.2XH-A1/ 360~950 d.c.V/ 5kW/10.24kWh
	ARK 12.8XH-A1/ 360~950 d.c.V/ 6.25kW/12.8kWh
	ARK 15.3XH-A1/ 360~950 d.c.V/ 7.5kW/15.36kWh
	ARK 17.9XH-A1/ 400~950 d.c.V/ 8.75kW/17.92kWh
	ARK 20.4XH-A1/ 550~950 d.c.V/ 10kW/20.48kWh
	ARK 23.0XH-A1/ 580~950 d.c.V/ 11.25kW/23.04kWh
	ARK 25.6XH-A1/ 640~950 d.c.V/ 12.5kW/25.6kWh
High Voltage Controller Model	BDC 95045-A1
Protective Class	I
Max. Current	21A
Total/Rated Capacity	50Ah/45Ah
Ingress Protection	IP65
Operation Ambient Temperature	-10°C~+50°C

Made in China

Fig 2.3: Nameplate

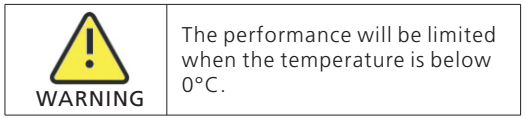

WARNING

The performance will be limited when the temperature is below 0°C.

2.4 Emergency Responses

Manufacturer takes foreseeable risk scenarios into consideration and is designed to reduce hazards and dangers. However, if the following situation occurs, do as below:

Situation Occurs	Description and action need
Leakage	Avoid touch of leaking liquid or gas. If you touch the leaking electrolyte, do as below immediately. Inhalation: Evacuate the contaminated area, and seek medical help. Eye contact: Rinse eyes with flowing water for 15 minutes, and seek medical help. Skin contact: Rinse contacted area thoroughly with soap and water, and seek medical help. Ingestion: Vomiting, and seek medical help.
On fire	It's hard for battery system ignite spontaneously. If the battery has caught a fire, do not try to extinguish the fire but evacuate people immediately.
Wet Packs	If the battery system is soaked or submerged in water, do not access it. Contact Growatt or distributors immediately for technical assistance.
Damaged shell	Damage to the shell is very dangerous, so special attention must be paid. They are no longer suitable for use and may be dangerous to personnel. If the battery case is damaged, please stop using it and contact Growatt or a distributor.

3 Storage and Transportation

3.1 Storage Requirements

➢ Place the product follow the identification on the packing case during storage.
➢ Do not put the product upside down or sidelong.
➢ The defective product needs to be separated from other product.
➢ The storage environment requirements are as follows:
- Install the product in a dry and clean place with proper ventilation.
- The storage temperature for a short week(7 days) is between -30°C to 60℃.
- If you store the product over a long period of six months, the storage temperature is between-20°C to 45°C, relative humidity: 5%~95%RH.
- Place the product away from corrosive and organic substances (including gas exposure).
- Free from direct exposure to sunlight and rain.
- At least two meters away from heat sources (such as a radiator) .
- Free from exposure to intensive infrared radiation.

Notice	If the battery pack is not used for more than six months, a complete charge-discharge cycle is required every six months.

3.2 Transportation Requirement

Battery pack has been certified in UN38.3 (Section 38.3 of the sixth Revised Edition of the Recommendations on the Transport of Dangerous Goods: Manual of Tests and Criteria) and SN/T 0370.2-2009 (Part 2: Performance Test of the Rules for the Inspection of Packaging for Exporting Dangerous Goods). Battery pack is classified as category 9 dangerous goods.
➢ The battery pack shall not be transported with other inflammable, explosive or toxic substances
➢ Ensure the original Package and label complete and recognizable.
➢ Prohibit direct exposure to sunlight, rain, condensing water caused by temperature difference and mechanical damages.
➢ Prohibit to pile up more than six battery pack.
➢ There will be a drop in capacity during transportation and storage.
➢ Transportation temperature is between-20°C to 45°C, relative humidity: 5%~95%RH.

Installation 4

WARNING	➢ Ensure to read the Guidance before installation in order to understand product information and safety cautions; ➢ Operators should be well trained technicians and fully understand the whole photovoltaic system, grid network, battery system, working principle and national regional standards; ➢ Installers must use insulating tools and wear safety equipment. ➢ Device damages caused by failure to comply with storage, transportation, installation and use requirements specified in Guidance are not coved by Warranty. ➢ Do not install or use battery near explosive or inflammable substances.are not coved by Warranty. ➢ Use battery in well-ventilated environment with temperature ranging from -10℃ to 45℃. For outdoor installation, build sun & rain shade to avoid direct sunlight and rain exposure. ➢ Maintain a minimum level of dust and dirt in the environment. ➢ Do not install battery in highly humid area such as bathroom. ➢ Please make sure that all battery pack connected in series are from the same batch, the same model and the same manufacturer; do not mix old batteries with new batteries. A battery pack that does not exceed 200 cycles is defined as a new battery.

4.1 Basic Installation Requirements

➢ The battery system can be installed indoors or outdoors. The following conditions are allowed:

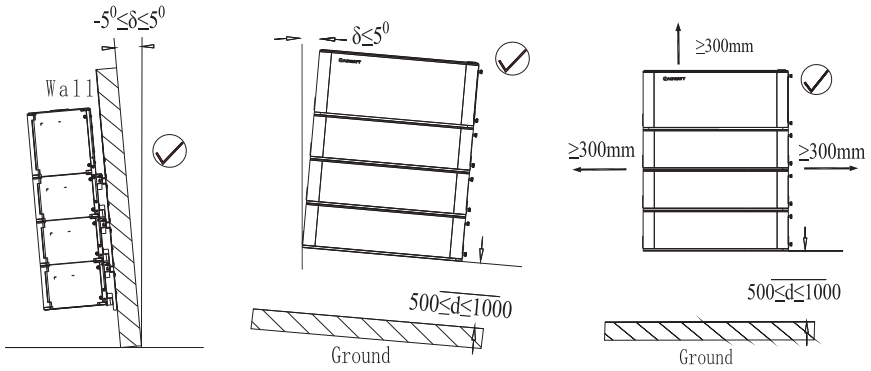

Fig 4.1:Acceptable wall mounted installation

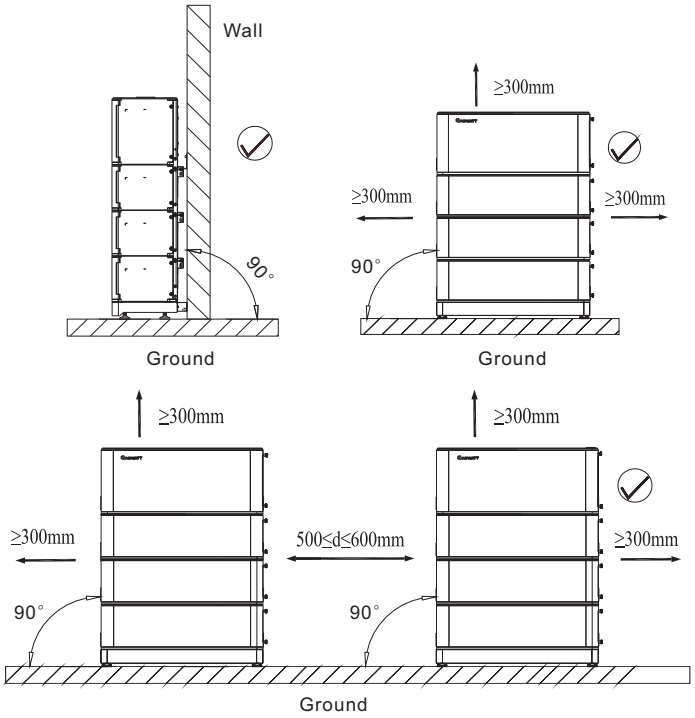

Fig 4.2:Acceptable floor standing installation

WARNING	Do not place the battery pack upside down.

➢ When installing outdoors, it is necessary to install sunshades and rain shelters to avoid direct exposure to sunlight and rain.

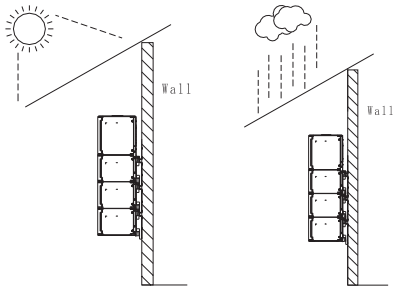

Fig 4.3: Sunshades and rain shelters

4.2 Installation Required Tools

The following tools are required to install the battery system:

Drill	Screw Driver	Wrench
Pencil	Tap Measure	Multimeter

It is recommended to wear the following safety gear when dealing with the battery system.

Insulated Glove	Safety Goggle	Safety Shoes

4.3 Installation Procedures

4.3.1 Pre-installation Check

➢ Check the PACK package before open it. If any abnormity is detected, do not open the Package and contact your distributor.

➢ Check the quantity of all parts inside according to the package list. If there is any part missing or damaged, please contact your distributor.

4.3.1.1 Check the BDC 95045-A1

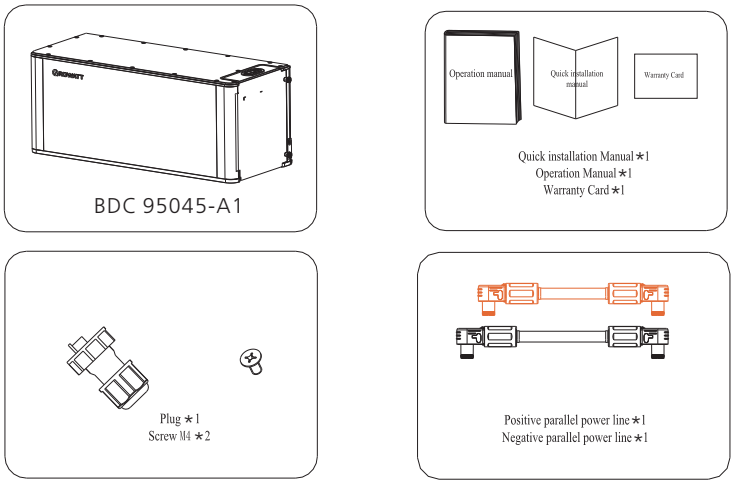

Fig 4.4: components and parts of BDC 95045-A1

4.3.1.2 check the ARK XH Cable

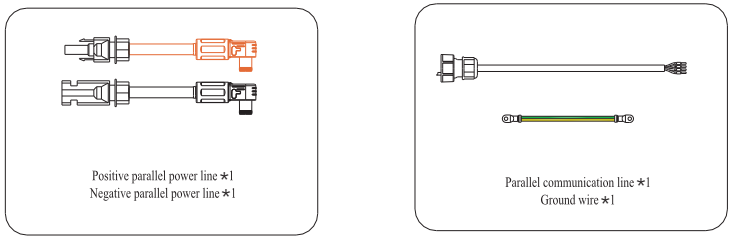

Fig 4.5: components and parts of ARK XH Cable

4.3.1.3 Check the ARK 2.5H-A1

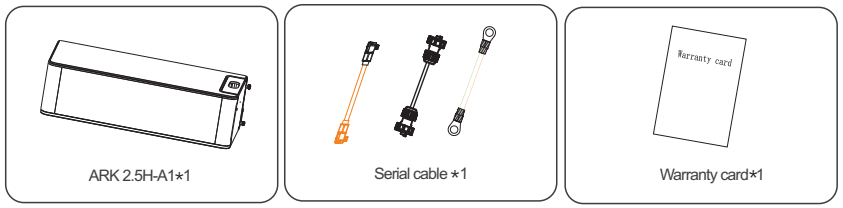

Fig 4.6: components and parts of ARK 2.5H-A1

4.3.1.4 Check the wiring of ARK 2.5H-A1 series cable

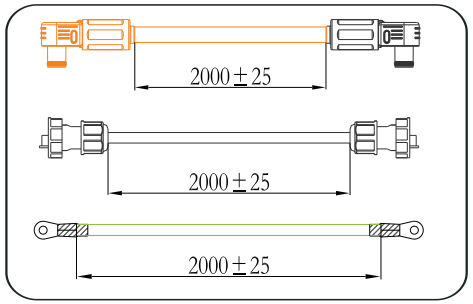

Fig 4.7: components and part of ARK 2.5H-A1 series cable

4.3.1.5 Check the wiring of BDC 95045-A1 to the hybrid Inverter

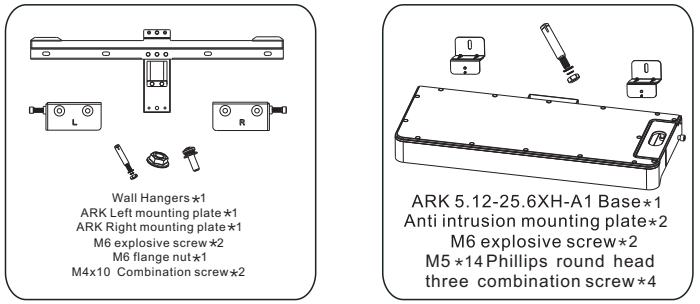

Fig 4.8: Optional installation accessories

Notice	➢ The High voltage controller (BDC 95045-A1) and the battery pack (ARK 2.5H-A 1) are standard accessories, please be sure to purchase both, a battery system only needs a High voltage controller (BDC 95045-A1), battery pack (ARK 2.5H-A1) You can freely match the number within 2 to 10 . ➢ The battery base is only used for floor installation. The number of battery bases is matched according to the number of battery rows installed. If it is a row, only one battery base is required, and two rows are required two. And the wall bracket is only used for wall installation. The number of wall brackets are determined by the number of battery modules. The battery base and wall bracket are optional accessory, not standard accessory. ” ➢ If you want to install the same battery system in two lines, you need to purchase a series extension cable separately for connection. ➢ The installation method can be selected wall Mounted installation or floor standing installation, see Section 4.3.1.5.

4.3.2 Wall Mounted Installation

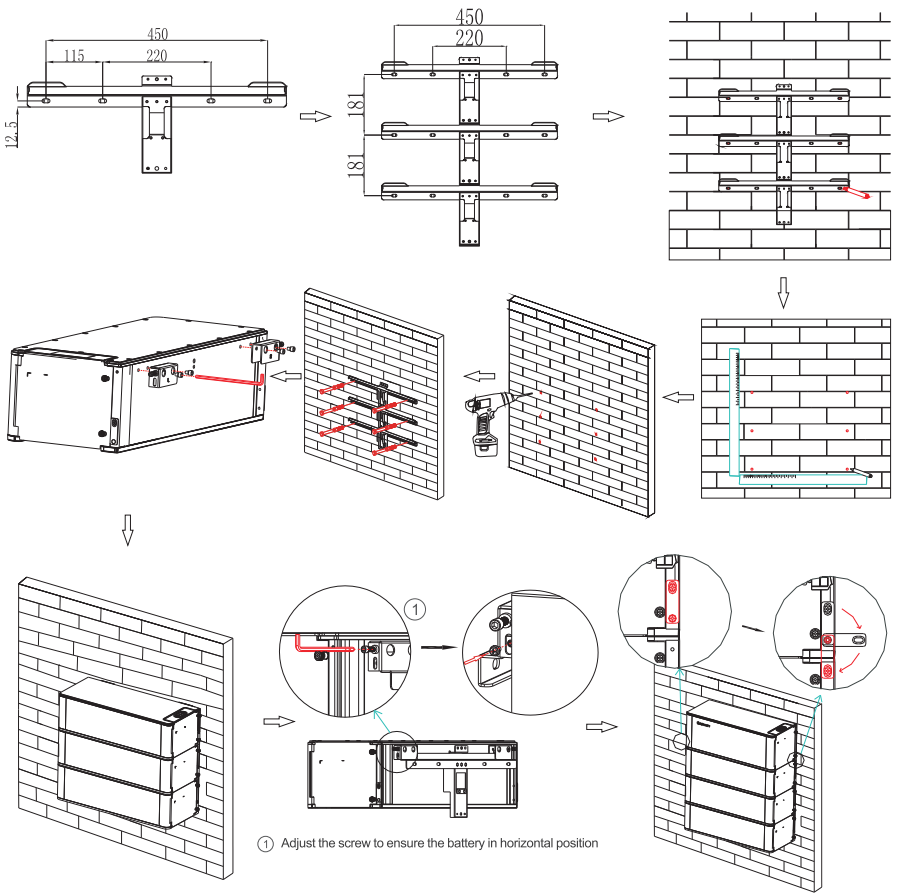

Fig 4.9: Multiple battery installation process with wall mount

➢ Step 1: Please make sure that the weight capacity of the wall should exceed 300kg.
➢ Step 2: Choose an alloy drill with a diameter of 8mm, and drill at least 50mm mounting holes in the wall. Clean the soil and insert the expansion tube into the hole, then screw in the screw to fix the wall mount.
➢ Step 3: Fix the battery on the wall mount from top to bottom, make sure that the battery will not shake, and then lock the safety screw.

Notice	➢ The number of wall-mounted installations should not exceed six (including High voltage controller). ➢ If there are more than six, please install them in two rows, and the spacing should be greater than or equal to 300mm.

4.3.3 Floor Standing Installation

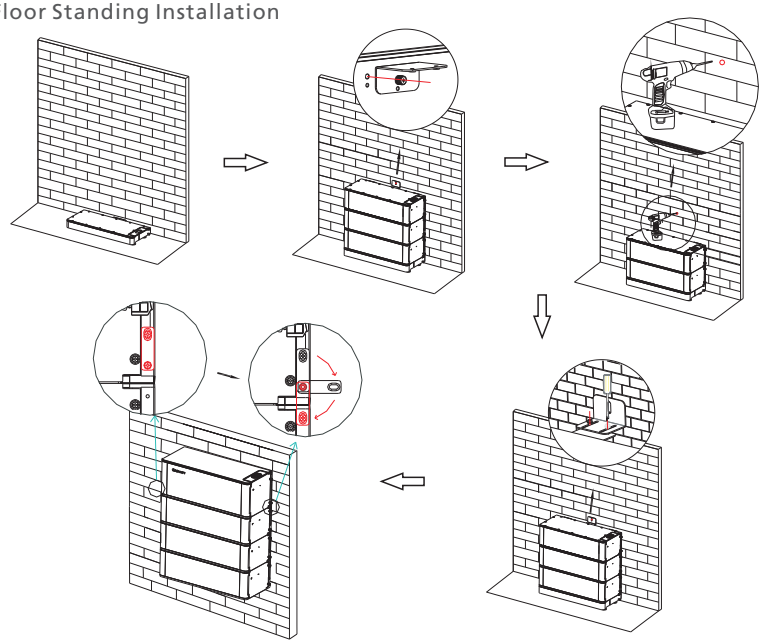

Fig 4.10: Multiple battery pack with base installation process

➢ Step 1: Choose an alloy drill with a diameter of 8mm and drill at least 50mm mounting holes on the wall. Clean the soil and insert the expansion tube into the hole, then screw in the screw to fix the wall mount.
➢ Step 2: Fix the battery on the wall bracket and the base from bottom to top, make sure the battery will not shake, and then lock the safety screw.

Notice	➢ For floor installation, we recommend that the number of the stacked battery modules is no higher than seven (including High voltage controller). ➢ If there are more than seven, please install them in two rows, and the spacing should be greater than or equal to 300mm.

4.4 Electrical Connection

WARNING	➢ Do not forget wear ESD wrist strap and gloves, safety gloves and goggles.

4.4.1 Communication port definition

BDC 95045-A1 communication interface			MIN TL-XH Hybrid inverter(single phase) interface		
Silk screen	Terminal serial number	Definition	Silk screen	Terminal serial number	Definition
INV	1	WAKE-(W-)	SYS COM	1	BAT.EN-
	2	WAKE+(W+)		2	BAT.EN+
	3	CAN_H		3	/
	4	CAN_L		4	/
	5	GND		5	/
	6	Null		6	/
	7	RS 485_B (B)		7	RS 485_B
	8	RS 485_A(A)		8	RS 485_A

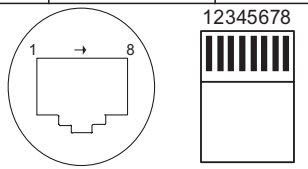

RJ45 Socket RJ45 Plug

Pin assignments front view

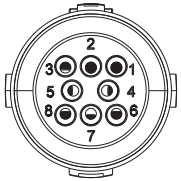

Pin assignments front view

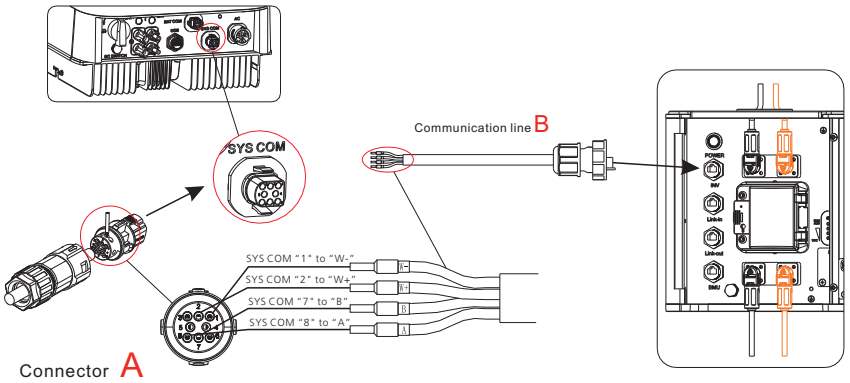

BDC 95045-A1 communication interface			MOD TL3-XH Hybrid inverter (three phase)interface		
Silk screen	Terminal serial number	Definition	Silk screen	Terminal serial number	Definition
INV	1	WAKE-(W-)	COM	10	BAT.EN-
	2	WAKE+(W+)		9	BAT.EN+
	3	CAN_H		/	/
	4	CAN_L		/	/
	5	GND		/	/
	6	Null		/	/
	7	RS 485_B (B)		8	RS485B2
	8	RS 485_A(A)		7	RS485A2

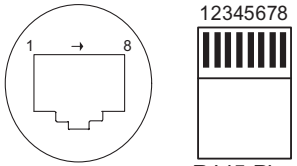

RJ45 Socket RJ45 Plug

Pin assignments front view

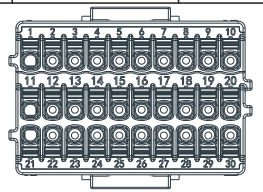

Pin assignments front view

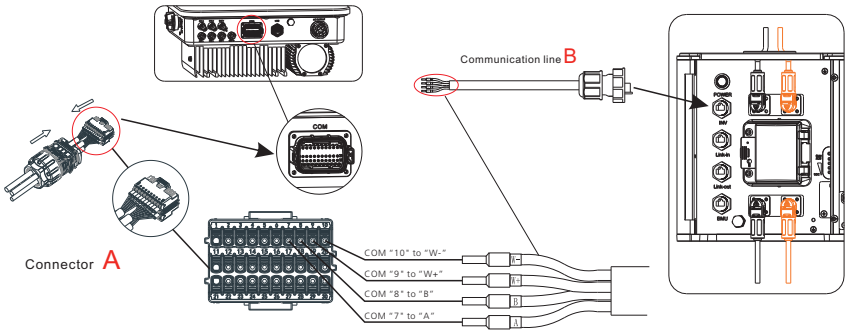

4.4.2 System connection

Notice	➢ Before installing in series, make sure that the voltage difference of the battery pack must be less than or equal to 0.5V. ➢ When connecting the power line, it must be the same color terminal to connect and then use it together, otherwise there may be dangers such as short circuit on the side. ➢ A DC circuit breaker has been installed in the High voltage controller, It is not recommended to install a DC circuit breaker between the battery system and the hybrid inverter system, If you want to install a DC circuit breaker, do not operate the DC circuit breaker with power on, otherwise the machine may be damaged. And then you need to purchase it yourself according to the following specifications: a. Voltage: 1000Vdc b. Current: 63A

4.4.2.1 System connection diagram

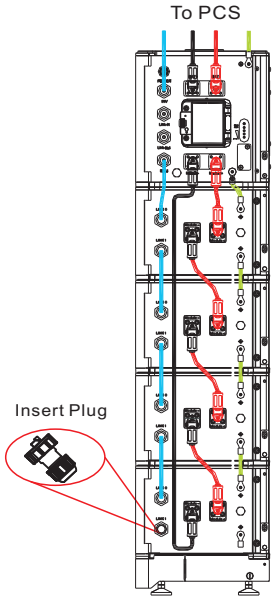

Fig 4.11: Single line installation

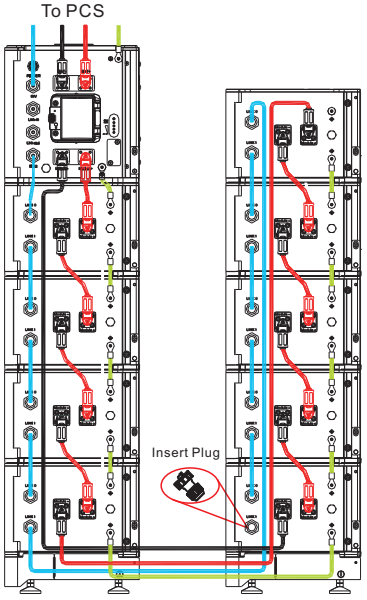

Fig 4.12: Two lines installation

Fig 4.11 Note:
The battery is not allowed to be installed in the running state, and all the RUN lights of battery modules should be off before installation.
To ensure system security, do not forget to install ground wire.
Don't forget to connect the communication plug of the last battery pack, otherwise it will cause system failure.
Fig 4.12 Note:
When installing in two rows, please purchase the extended serial cable, extended ground cable and extended communication cable between the two rows separately.
Don't forget to connect the ommunication plug of the last battery pack, otherwise it will cause system failure.

4.4.2.2 Electrical wiring connection

A. BDC 95045-A1 (High voltage controller) wiring
Step 1: Insert the power cable into the corresponding port, then there is click sound indicating the connection is ok.
Step 2: Insert the communication cable into the "INV port" and "BMU port", and then tighten the communication terminal clockwise. INV communication port is used for communication connection with hybrid inverter, BMU communication port is used for communication connection with battery pack.

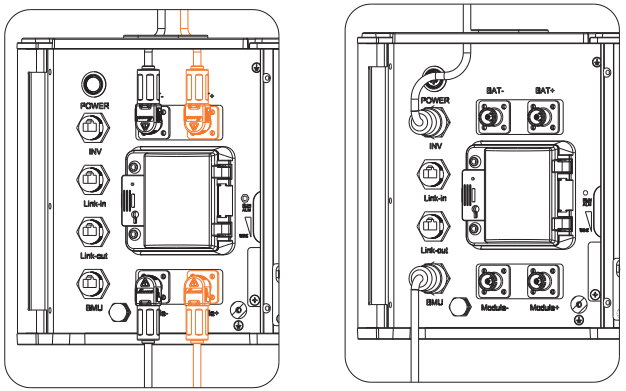

Fig 4.13: BDC 95045-A1 Electrical wiring connection diagram

Notice	➢ For a single cluster battery system, the "Link-in" and "Link out" port of the BDC 95045-A1 don't need to be connected, they are only used for parallel connection of the battery systems. ➢ Please pay attention to the connector color when connection the power line. Only the same color of the connector could be connected together. ➢ To ensure system security, do not forget to install ground wire. ➢ This area is a restricted access area , which is explained below: • area accessible only to electrically skilled persons and electrically instructed persons with the proper authorization. • note 1 to entry: An electrically skilled person is a person with relevant education and experience to enable him or her to perceive risks and to avoid hazards electricity can create. • note 2 to entry: An electrically instructed person is a person adequately advised or supervised by electrically skilled persons to enable him or her to perceive risks and to avoid hazards which electricity can create.

B.ARK 2.5H-A1(Battery module) wiring

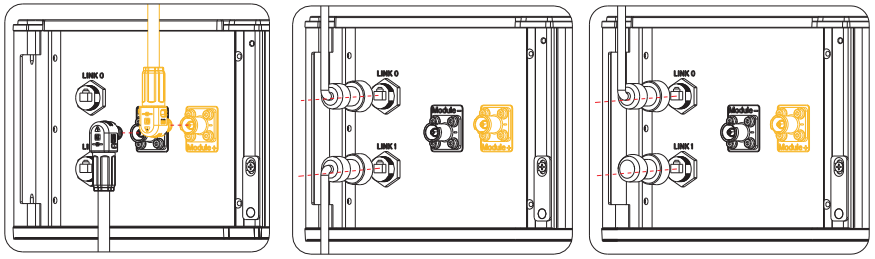

Fig 4.14: ARK 2.5H-A1 Electrical wiring connection diagram

Step 1: Insert the power cable into the corresponding port, then there is click sound indicating the connection is ok.
Step 2: Insert the communication cable into the "Link0 port" and "Link1 port", and then tighten the communication terminal clockwise.
Step 3: Insert a plug into the "Link1 port" of the last ARK 2.5H-A1(battery module). The plug is an annex of BDC 95045-A1 (High voltage controller).

Notice	➢ The battery module furthest from the BDC 95045-A1 (High voltage controller) is defined as the last battery module. ➢ Please pay attention to the connector color when connecting the power line. Only the same color of the connector could be connected together. ➢ The power lines between the battery modules are connected in series. Be careful not to short-circuit the battery modules during the connection process.

Power on/off Battery system 5

Notice	➢ The installation and use of batteries involve much specialized knowledge. Therefore, technicians should be given appropriate technical training and obtain operational certificates in compliance with local laws and regulations. Please ensure technicians have obtained training certificate before operation. ➢ Please stand on dry insulating objects and do not wear conductive material such as watches and necklace during operation. Insulated tools should be used. ➢ Do not contact any positions with potential difference. ➢ Prohibition sign should be hung on the battery: " Non - professionals, do not touch." ➢ If any abnormalities occur during the startup phase, power off the PACK immediately. After problem confirmed, proceed again. ➢ Make sure the inverter is turned off before checking the PACK.

5.1 Power on Battery system

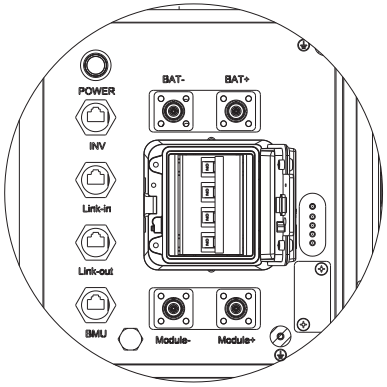

Fig 5.1

➢ Before turning on the battery system, please check whether the system wiring is properly connected, including the wiring to the hybrid inverter.
➢Turn the DC breaker of the BDC 95045-A1 (High voltage controller) to "ON", then press the power button until the Battery Run light turn yellow, which means the battery system is powered on completely .

Power on the PACK by pressing power button(t>5S)		
Serial	Procedures	Acceptation criteria
1	Connect the battery and hybrid inverter	Make sure the wiring harnesses are well connected
2	Close the breaker of the battery system	Make sure the breaker is ON
3	Press POWER button for three to eight seconds. Observe the LED indication on panel.	1. If both RUN/ALM and SOC lights turn on normally, PACK is powered on successfully. 2. If RUN/ALM light turns red, there is a failure and should solve it before power on again.

5.2 Power off Battery system

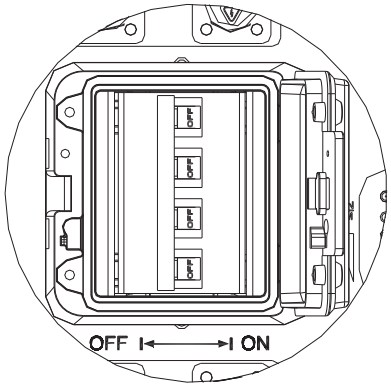

Fig 5.2

➢ Turn the DC breaker of the BDC 95045-A1 (High voltage controller) to "Off" to turn off the entire.

Maintenance Guide 6

6.1 Preparation

Before maintenance, please make sure that the battery system is powered off and the DC circuit breaker is off.

6.2 Battery pack or High voltage controller replacement

➢ Wear safety gloves.
➢ Open the breaker and power off the battery system.
➢ Disconnect power lines and communication lines of the battery system.
➢ Wall-mounting battery system: Uninstall the safety screws on both sides of the battery pack or High voltage controller. Lift up the battery pack or High voltage controller.
➢ Floor-standing battery system: Uninstall the safety screws on both sides of the battery pack or High voltage controller. Lift up the battery pack or High voltage controller.
➢ Put the battery pack or High voltage controller into the packing box according to the repair procedure and transport the battery pack or High voltage controller to the designated repair site.
➢ Install new battery pack or High voltage controller based on procedure specified in Section 4.

6.3 System Failure Information List and Troubleshooting Suggestions

Error Indication ALM	Error description	Error cause	Suggested actions
✸(ALM Light Flickers)	Discharge under voltage protection	Single cell voltage below the threshold for under-voltage protection.	There is over discharge risk. User should stop discharging and arrange recharge.
	Charge over voltage protection	Single cell voltage exceeding threshold for protection threshold.	1. There is no safety threat; 2. User should stop charging. Wait for the battery system to automatically resolve the fault.
	External RS485 Communication failure	Communication loss between hybrid inverter and battery system.	1. There is no safety threat and user should stop using battery. 2. Check if hybrid inverter and battery communication terminal is well connected. 3. If hybrid inverter and PACK cannot communicate when the communication wire is confirmed well connected, user should contact installer to repair battery.

	Interior CAN Communication failure	Communication loss between two parallel	1.Check whether the communication line between the battery pack and the battery pack is connected OK; 2.Check whether the communication line between the High voltage controller and the battery pack is connected OK.
	High temperature protection	The temperature exceeds the bms protection value	It is dangerous, please stop using the battery immediately, wait for the battery temperature to drop, the fault will be automatically resolved.
	Low temperature protection	The temperature is below the protection value	No safety risk, wait for the temperature to rise, the fault will be automatically resolved.
●(ALM Light on)	Discharge short circuit	External short circuit of battery system	There is safety risk and user should stop using battery User should contact installer to repair PCS and battery.
	Precharger short circuit		
	Precharger overtime circuit		
	Voltage sampling anomaly protection	BMS Voltage sampling failure	There is safety risk and user should stop using battery. User should contact installer to repair battery.
	Current sampling fault	BMS current sampling failure	
	Main circuit fault	BMS main power circuit failure	There is safety risk and user should stop using battery. User should contact installer to repair battery.
	EEPROM fault protection	BMS MCU fail to get data from EEPROM	There is safety risk and user should stop using battery. User should contact installer to repair battery.
	Chip fault protection	Communication loss between two MCU	There is safety risk and user should stop using battery. User should contact installer to repair battery.

Technical Specifications7

7.1 ARK XH-A1(high voltage system)

System Model	ARK 5.1XH-A1	ARK 7.6XH-A1	ARK 10.2XH-A1	ARK 12.8XH-A1	ARK 15.3XH-A1
High Voltage Controller Model	BDC 95045-A1				
Number of power modules	1				
Battery module	ARK 2.5H-A1 (2.56kWh,51.2V,28kg)				
Battery module energy	2.56kWh				
Number of Modules in Series	2	3	4	5	6
Nominal energy	5.12kWh	7.68kWh	10.24kWh	12.8kWh	15.36kWh
Max. output power	2.5kW	3.75kW	5kW	6.25kW	7.5kW
Peak output power	5kW,10s	7.5kW,10s	10kW,10s	12.5kW,10s	15kW,10s
Dimension (W*D*H)①	650 * 260 * 630 mm	650 * 260 * 815 mm	650 *260 * 1000 mm	650 * 260 * 1185mm	650 * 260 * 1370 mm
Weight②	71kg	99kg	127kg	155kg	183kg
Module Nominal Voltage③	102.4V	153.6V	204.8V	256V	307.2V
Nominal voltage④	400V	400V/650V	400V/650V	400V/650V	400V/650V
Operating voltage range	360V～550V	360V～950V	360V～950V	360V～950V	360V～950V
Battery type	Cobalt Free Lithium Iron Phosphate (LFP)				
Ingress Protection	IP65				
Installation	Wall-mounted or Floor installation				
Altitude	≤2000m				
Operating ambient temperature	-10℃~50℃				
Relative humidity	5%～95%				
Cooling	Natural				
Warranty	10 years				
Display	LED indicator				
Battery System	Secondary Li-ion Battery System				

Note：

① The size does not include the base. When configuring more than 8PCS battery Modules, it is recommended to place them in two groups to avoid stacking too high and inconvenient installation.

② When choosing wall-mounted installation, you need to ensure that the installation wall can bear the weight of the battery system. We recommend floor stacking installation.

③ This Nominal Voltage refer to the Module side Voltage(battery packs Voltage after series.

④ Single phase power conversion system allows 2-7PCS battery modules in series, its nominal voltage is 400V;three phase power conversion system allows 3-10PCS battery modules in series, its nominal voltage is 650V.

System Model	ARK 17.9XH-A1	ARK 20.4XH-A1	ARK 23.0XH-A1	ARK 25.6XH-A1
High Voltage Controller Model	BDC 95045-A1			
Number of power modules	1			
Battery module	ARK 2.5H-A1（2.56kWh,51.2V,28kg）			
Battery module energy	2.56kWh			
Number of Modules in Series	7	8	9	10
Nominal energy	17.92kWh	20.48kWh	23.04kWh	25.6kWh
Max. output power	8.75kW	10kW	11.25kW	12.5kW
Peak output power	17.5kW,10s	20kW,10s	22.5kW,10s	25kW,10s
Dimension (W*D*H)①	650 * 260 * 1555 mm	650 *260*1740 mm	650 *260 * 1925 mm	650 *260 * 2110 mm
Weight②	211kg	239kg	267kg	295kg
Module Nomial Voltage③	358.4V	409.6V	460.8V	512V
Nominal voltage④	400V/650V	650V	650V	650V
Operating voltage range	400V～950V	550V～950V	580V～950V	640V～950V
Battery type	Cobalt Free Lithium Iron Phosphate (LFP)			
Ingress Protection	IP65			
Installation	Wall-mounted or Floor installation			
Altitude	≤2000m			
Operating ambient temperature	－10℃~50℃			
Relative humidity	5%～95%			
Cooling	Natural			
Warranty	10 years			
Display	LED indicator			
Battery System	Secondary Li-ion Battery System			

Note：
① The size does not include the base. When configuring more than 8PCS battery Modules, it is recommended to place them in two groups to avoid stacking too high and inconvenient installation.
② When choosing wall-mounted installation, you need to ensure that the installation wall can bear the weight of the battery system. We recommend floor stacking installation.
③ This Nominal Voltage refer to the Module side Voltage(battery packs Voltage after series.
④ Single phase power conversion system allows 2-7PCS battery modules in series, its nominal voltage is 400V;Three phase power conversion system allows 3-10PCS battery modules in series, its nominal voltage is 650V.

7.2 BDC 95045-A1 (High voltage controller)

No.	Items	Specification
1	Model	BDC 95045-A1
2	BAT voltage range	90V-568V
3	Power module output voltage	360V-950V①
4	Maximum current	21A
5	peak current	41A,10s
6	temperature range	-10~50℃
7	IP rating	IP65
8	Warranty	≥10 years
9	communication method	CAN2.0,RS485
10	Dimensions (W/D/H)	650*260*265 mm ±2mm
11	Weight	15±1kg
12	Certification	CE-EMC
13	Environmental requirements	RoHS

Note:
①The actual operating voltage range depends on the matched hybrid inverter system

7.3 ARK 2.5H-A1(battery pack)

No.	Items	Specification
1	Battery pack Module	ARK 2.5H-A1
2	Nominal Capacity/Energy	50Ah/2.56kWh
3	Rated/Usable Capacity/Energy	45Ah/2.3 kWh
4	Rated Voltage	51.2V
5	Operating Voltage	47.2 - 56.8V
6	Rated current(25℃)	25A
7	Maximum current(25℃)	50A
8	Battery Type	Cobalt Free Lithium Iron Phosphate (LFP)
9	Operative temperature range	-10~50℃
10	Storage conditions	－30℃~50℃/7 days; -20℃~45℃/6 months; 95%RH
11	Cooling	Natural cooling
12	Dimension (W/D/H)	650/260/184mm±2mm
13	Weight	27±1kg
14	Installation	Wall-mounted installation/floor standing installation
15	Warranty	10 Years
16	Ingress protection	IP65
17	Battery designation	IFpP/41/150/102/[1P16S]M/-10+50/90
18	Cell safety certification	IEC62619/UL1642
19	Safety certification	IEC62619/CE/RCM/ CEC
20	Transportation test standard	UN38.3
21	Environmental requirements	RoHS

Method for calculating rated capacity:
Rated capacity of the measured module: 45 Ah
Number of modules connected in series: 2~10
Calculated rated capacity (Ah) = 45 Ah *1 =45Ah

7.4 Battery System designation

Model	Battery designation	Recommended charge instructions
ARK 5.1XH-A1	IFpP/41/150/102/[(1P16S)2S]M/-10+50/90	constant current 6A charging to 400V of DC/DC output(Module side voltage and current is limited by DC/ DC circuit)
ARK 7.6XH-A1	IFpP/41/150/102/[(1P16S)3S]M/-10+50/90	constant current 6A charging to 650V of DC/DC output(Module side voltage and current is limited by DC/ DC circuit)
ARK 10.2XH-A1	IFpP/41/150/102/[(1P16S)4S]M/-10+50/90	constant current 8A charging to 650V of DC/DC output(Module side voltage and current is limited by DC/ DC circuit)
ARK 12.8XH-A1	IFpP/41/150/102/[(1P16S)5S]M/-10+50/90	constant current 10A charging to 650V of DC/DC output(Module side voltage and current is limited by DC/ DC circuit)
ARK 15.3XH-A1	IFpP/41/150/102/[(1P16S)6S]M/-10+50/90	constant current 12A charging to 650V of DC/DC output(Module side voltage and current is limited by DC/ DC circuit)
ARK 17.9XH-A1	IFpP/41/150/102/[(1P16S)7S]M/-10+50/90	constant current 13A charging to 650V of DC/DC output(Module side voltage and current is limited by DC/ DC circuit)
ARK 20.4XH-A1	IFpP/41/150/102/[(1P16S)8S]M/-10+50/90	constant current 15A charging to 650V of DC/DC output(Module side voltage and current is limited by DC/ DC circuit)
ARK 23.0XH-A1	IFpP/41/150/102/[(1P16S)9S]M/-10+50/90	constant current 17A charging to 650V of DC/DC output(Module side voltage and current is limited by DC/ DC circuit)
ARK 25.6XH-A1	IFpP/41/150/102/[(1P16S)10S]M/-10+50/90	constant current 19A charging to 650V of DC/DC output(Module side voltage and current is limited by DC/ DC circuit)

Appendix I

LED indication Control Mechanism

LED light definition							
Status	Items	SOC indication				RUN/ALM	Remark
		LED1	LED2	LED3	LED4	LED5	
Charge SOC	0%-25%	✸(t=1S)				●	RUN/ALM light on and one SOC lights flicker
	26%-50%	●	✸(t=1S)			●	
	51%-75%	●	●	✸(t=1S)		●	
	76%-99%	●	●	●	✸(t=1S)	●	
	100%	●	●	●	●	●	
Discharge SOC	100%-76%	●	●	●	●	●	
	75%-51%	●	●	●		●	
	50%-26%	●	●			●	
	25%-5%	●				●	
	5%-0%	●				✸ (t=1S)	RUN/ALM light flicker
Idle	100%-76%	●	●	●	●	●	
	75%-51%	●	●	●		●	
	50%-26%	●	●			●	
	25%-5%	●				●	
	5%-0%	●				✸ (t=1S)	RUN/ALM light flicker
Protection	Cell charge overvoltage alarm	SOC indicates current remaining capacity				✸(t=1S)	RUN/ALM light flicker green
	Cell charge overvoltage protection					✸(t=1S)	RUN/ALM light flicker green
	Charge total voltage overvoltage alarm					✸(t=1S)	RUN/ALM light flicker green
	Charge total voltage overvoltage protection					✸(t=1S)	RUN/ALM light flicker green
	Charge and discharge over current alarm					✸(t=1S)	RUN/ALM light flicker green

Protection	Charge and discharge over current protection		✹(t=1S)	RUN/ALM light flicker green
	Charge and discharge over current hardware protection		✹(t=1S)	RUN/ALM light flicker green
	Charge and discharge high temperature alarm		✹(t=1S)	RUN/ALM light flicker green
	Charge and discharge high temperature protection		✹(t=1S)	RUN/ALM light flicker green
	Charge and discharge low temperature alarm		✹(t=1S)	RUN/ALM light flicker green
	Charge and discharge low temperature protection		✹(t=1S)	RUN/ALM light flicker green
	Cell discharge Under-voltage alarm		✹(t=1S)	RUN/ALM light flicker green
	Cell discharge under voltage protection		✹(t=1S)	RUN/ALM light flicker green
	Discharge total voltage under voltage alarm		✹(t=1S)	RUN/ALM light flicker green
	Discharge total voltage under voltage protection		✹(t=1S)	RUN/ALM light flicker green

Protection	Charge and discharge Over current hardware protection	SOC indicates current remaining capacity	✹(t=1S)	RUN/ALM light flicker green
	Ambient temperature over-temperature alarm		✹(t=1S)	RUN/ALM light flicker green
	Ambient temperature over-temperature protection		✹(t=1S)	RUN/ALM light flicker green
	Cell voltage difference is too large alarm		✹(t=1S)	RUN/ALM light flicker green
	Cell voltage difference is too large protection		✹(t=1S)	RUN/ALM light flicker green
	Cell temperature difference is too large alarm		✹(t=1S)	RUN/ALM light flicker green
	Cell temperature difference is too large protection		✹(t=1S)	RUN/ALM light flicker green
	Cell rapid over voltage protection		✹(t=1S)	RUN/ALM light flicker green
	Battery pack over voltage alarm		✹(t=1S)	RUN/ALM light flicker green
	Battery pack over voltage protection		✹(t=1S)	RUN/ALM light flicker green
	Battery pack under voltage alarm		✹(t=1S)	RUN/ALM light flicker green
	Battery pack under voltage protection		✹(t=1S)	RUN/ALM light flicker green

Protection	Low temperature charging current limit non-response protection	SOC indicates current remaining capacity	(t=1S)	RUN/ALM light flicker green
Fault, personnel handling required	Precharged short circuit		(t=1S)	RUN/ALM light flicker red
	Precharged overtime circuit		(t=1S)	RUN/ALM light flicker red
	Interior CAN communication failure		(t=1S)	RUN/ALM light flicker red
	Insulation fault alarm		(t=1S)	RUN/ALM light flicker red
	UART communication timeout alarm		(t=1S)	RUN/ALM light flicker red
	Communication timeout alarm with hybrid inverter		(t=1S)	RUN/ALM light flicker red
	Abnormal output port voltage		(t=1S)	RUN/ALM light flicker red
	BMU encoding timeout		(t=1S)	RUN/ALM light flicker red
	Cell failure protection		(t=1S)	RUN/ALM light flicker red
	Main circuit failure protection		(t=1S)	RUN/ALM light flicker red
	EEPROM fault protection		(t=1S)	RUN/ALM light flicker red
	Front-end chip failure protection		(t=1S)	RUN/ALM light flicker red
	EEPROM calibration parameter failure		(t=1S)	RUN/ALM light flicker red

Fault, personnel handling required	Current sampling failure	SOC indicates current remaining capacity	(t=1S)	RUN/ALM light stays red
	Total voltage sampling failure		(t=1S)	RUN/ALM light stays red
	The motherboard power supply is abnormal		(t=1S)	RUN/ALM light stays red
	Insulation resistance protection		(t=1S)	RUN/ALM light stays red
	Hardware reference voltage abnormal failure		(t=1S)	RUN/ALM light stays red

Shenzhen Growatt New Energy Co., Ltd
4-13/F,Building A,Sino-German(Europe) Industrial Park,
Hangcheng Ave,Bao'an District, Shenzhen, China

T +86 755 2747 1942
E service@ginverter.com
W www.ginverter.com